Sentry Water-Cable™ Barrier Installation, Maintenance, and Repair Manual

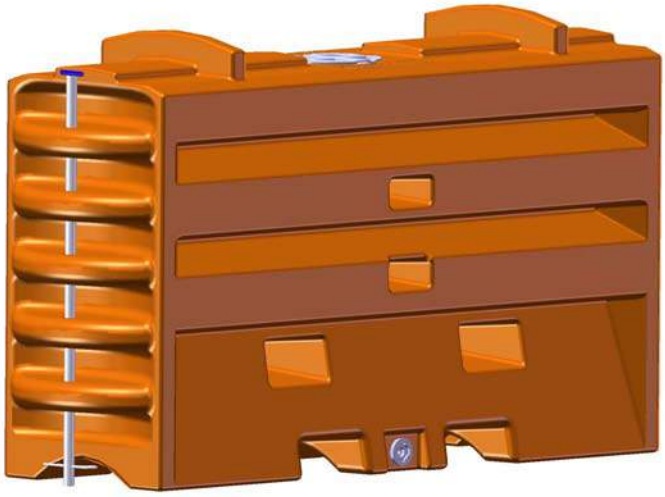

TL-1, TL-2 and
TL-3 Rated

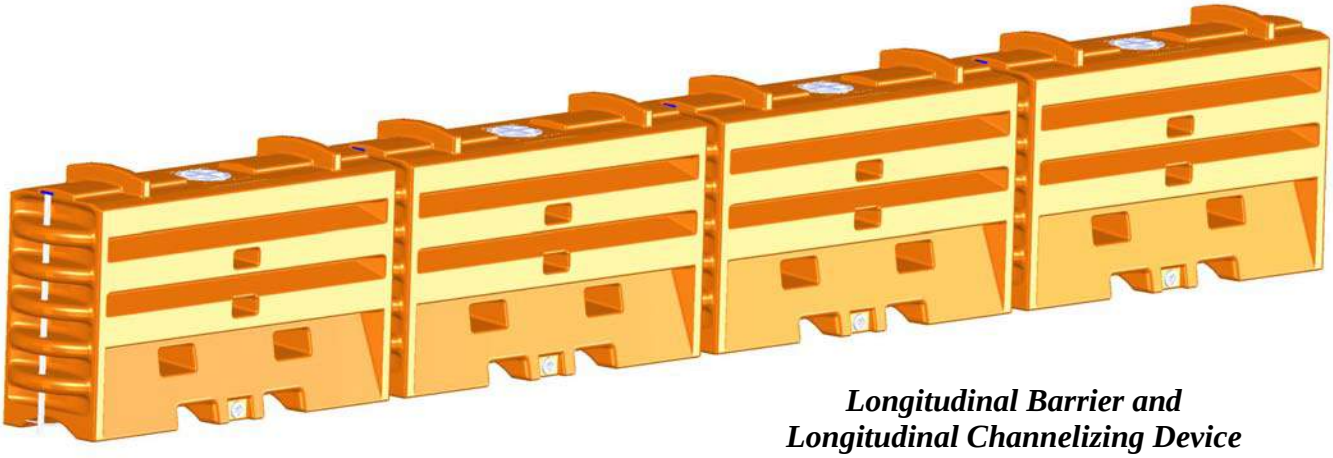

Longitudinal Barrier and
Longitudinal Channelizing Device

Designed without the need for an external attached structure to meet Test Level 1, Test Level 2 and Test Level 3 barrier performance for Longitudinal Barrier and Longitudinal Channelizing Device

TrafFix Devices Inc.

160 Ave. La Pata
San Clemente, California 92673
(949) 361-5663
FAX (949) 361-9205
www.traffixdevices.com

PN 45060 Revision C (Dated 11/07/12)

Table of Contents

160 Ave. La Pata
San Clemente, California 92673
(949) 361-5663
FAX (949) 361-9205
www.traffixdevices.com

Product Overview/Function

General description- The Sentry Water-Cable™ Barrier is a plastic, water filled portable longitudinal barrier used on the National Highway System to provide positive protection in the work zone.

Advantages the Sentry has over other water filled barrier products:

-The high level of internal impact energy attenuation requires no externally added steel

The Sentry Water-Cable Barrier utilizes water dispersion upon impact in combination with internal molded-in steel cables. Upon impact, the plastic container ruptures and disperses the contained water. Simultaneously, the internal cables provide the strength to safely catch the misguided vehicle like a net, preventing vehicle intrusion into the work zone.

-One barrier meets NCHRP-350 crashworthy test requirements for TL-1, TL-2 and TL-3

The Sentry Water-Cable Barrier is accepted as a longitudinal barrier and as a longitudinal device. This multi accepted product eliminates the identification and mislabeling of products between barrier, device, or barricade. The Sentry Water-Cable Barrier meets all industry needs with one product for all applications at all test level speeds. There is no need to keep variants for different speed levels, sizes, or applications in inventory.

The Sentry Water-Cable Barrier has been tested and passed all crash tests required by NCHRP Report 350 and meets all crashworthy acceptance criteria for use on the National Highway System. (Reference FHWA Product Acceptance HSSD/B-196)

Product Function

The Sentry is designed to form a series of individual sections linked together to function as a portable longitudinal barrier to keep vehicles from penetrating the linked barrier sections. The Sentry provides positive separation from the vehicles on the roadway and workers in the roadside work zone.

When an impacting vehicle contacts the Sentry Water-Cable Barrier, the water and internal molded-in steel cables act together to re-direct or bring the impacting vehicle to a controlled stop.

All Sentry Water-Cable Barrier sections are Orange or White and contain internal molded-in steel cables. Any other color, or product without internal molded in cables, will not qualify as a Sentry Water-Cable Barrier product.

Product Components and General Specifications

The Sentry Water-Cable Barrier sections are Orange or White in color and have an outer shell made from virgin high density polyethylene (HDPE) and have a water capacity of 220 gallons [832 liters]. The polyethylene material is durable and recyclable and will break up in large sections upon impact. It will not crack or corrode when left on the job site or stored for long periods of time.

Overall Dimensions
Width: 22½" [571 mm]
Height: 42-11/16" [1084 mm]
Length 75-3/4" [1924 mm] pin to pin

Weight:
Empty Weight: 160 lbs [72.6 kg]
Filled Weight: 2000 lbs [907 kg]

Fill Capacity
Volume: 220 Gal [832 L]

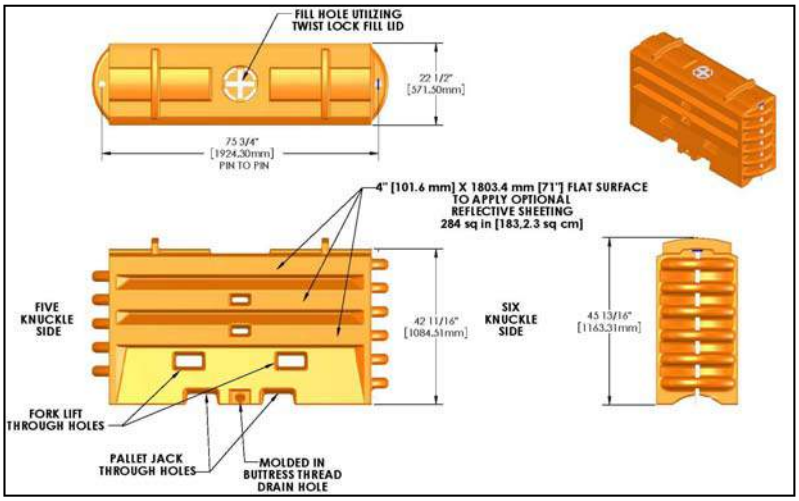

Figure 1: Sentry Water-Cable Barrier

Each Sentry section contains an eight inch diameter water fill-hole located on the top surface of each wall section. This large diameter opening allows easy access for water filling using a water tanker truck or large diameter hose. Each Sentry section comes with a twist lock lid to cover the fill hole opening when the water filling process is complete. An optional water level indicator built into the twist lock lid is available to show the section is properly filled (refer to pg 26).

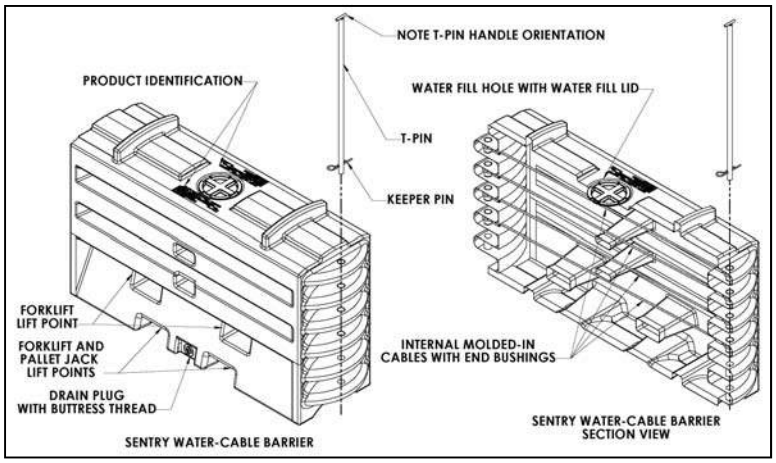

Figure 2: Sentry Components and Internal Section

For draining, each Sentry section has a centrally located drain hole designed at the bottom of each wall section. Each drain hole contains molded-in Buttress threads. The drain plug requires 1-1/2 turns to seal the plug preventing any water leaks. The molded-in Buttress threads eliminate the possibility of cross threading compared to standard threads used in a spin welded insert. Cracked spin welded inserts may require repair and are typically not reliable, leading to water leaks. The Sentry, with its molded in Buttress threads, eliminates both issues of cross threading and insert repair.

Designed into the side walls are two through holes which can be used to insert forklift blades for moving the filled or unfilled Sentry sections as needed. Also, there are two forklift pockets located at grade level. **The molded-in steel cables are not be to be used for lifting the Sentry sections. Only the through holes should be used to lift the Sentry as identified in Figures 1 and 2 (or page 20 and 21).**

Installation

Foundation Requirements

The Sentry System is free standing and requires only that the foundation support the weight of the fully loaded sections. The foundations would include concrete, asphalt, dirt and gravel.

Installation Instructions

The Sentry Water-Cable Barrier will be delivered in two pieces. The first piece will be the water wall barrier section with the twist lock fill cap and the buttress threaded drain plug installed. The second piece will be the galvanized steel T-pin with the keeper pin installed.

Proper site planning will have identified the required quantity and placement of the Sentry sections. The sections should be removed from the transport vehicle using safe lifting and movement procedures and emplaced as planned.

At the end of each Sentry section are vertical interlocking knuckles. Within the knuckles are a series of vertical concentric holes as seen in Figure 3 (or pg 22). When linking individual Sentry wall sections together, the knuckle holes are vertically aligned with the adjacent Sentry wall section. This creates a series of eleven vertical knuckles interlinked together with a vertical connecting T-pin which is dropped through the concentric aligned holes. Located at the bottom of each T-pin is a safety keeper pin which is inserted into the alignment hole at the bottom of each T-pin as seen in Figure 3. The keeper pin must be inserted to finalize the installation on each wall section. **The lower end of the T-pin should come in contact with the grade surface as seen in Figure 3 to insure that the pin is fully inserted.**

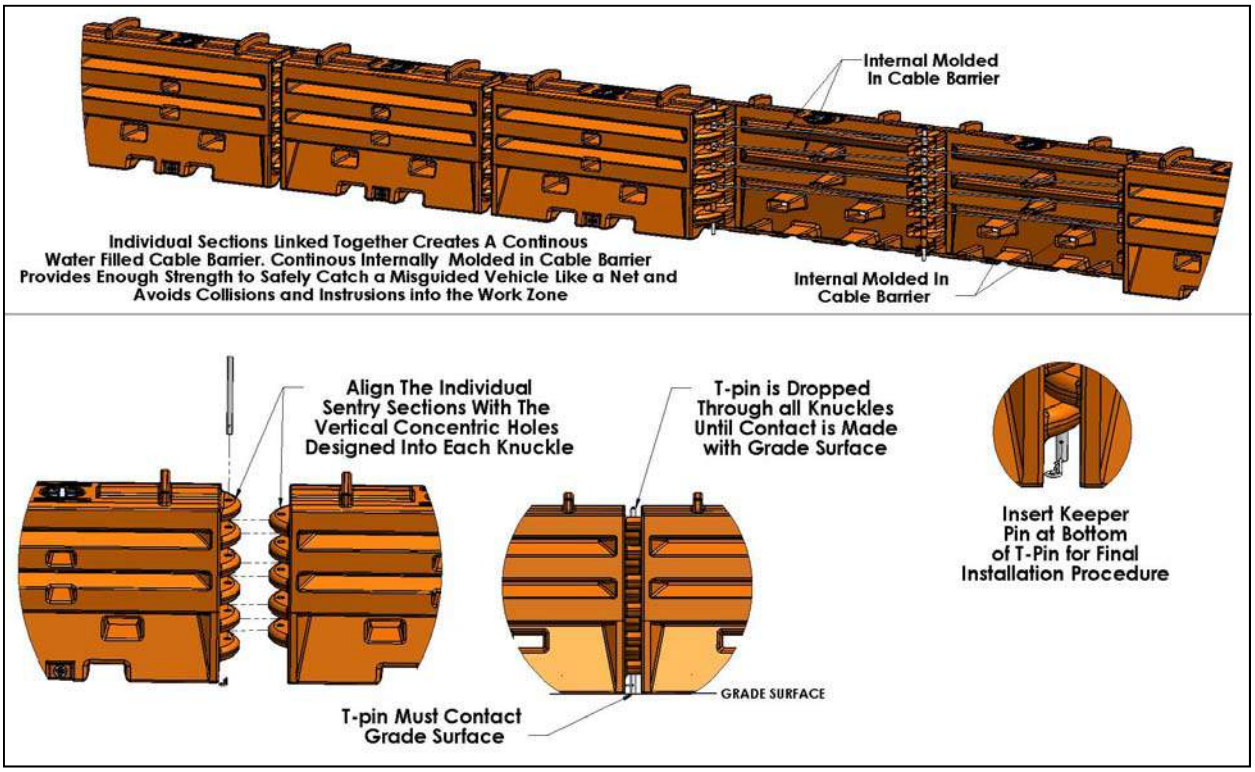

Figure 3: Installation Assembly Guide Diagram

When the Sentry has been placed in accordance with the site plan and the sections fastened together, the twist lock fill cap for each section should be removed and the section filled with water. The fill cap is then replaced insuring that all tabs are engaged. If the optional water level indicator is installed, insure that the level indicator becomes fully raised. Since the water level indicator is built into the fill cap, care should be taken to insure that the water level indicator is not damaged during the removal and re-installation process.

When all sections have been linked together, the T-pin and keeper pins installed and the sections filled with water including installation of the fill cap, the Sentry Water-Cable Barrier is ready for use.

Angle of Rotation

The Sentry Water-Cable Barrier is designed to have maximum angle of rotation of 15° when linked together as seen in Figure 4 (or on pg 23). When fully rotated at the maximum angle of rotation, the linked Sentry section can be set-up with a minimum inside radius of 18 ft [5.5 m] as seen in Figure 4

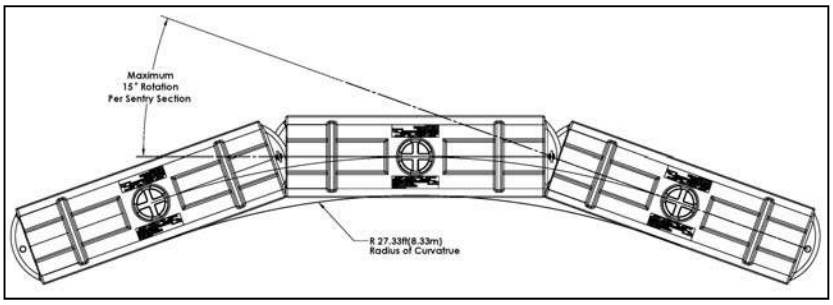

Figure 4: Angle of Rotation Sentry Sections Linked

Recommendations for Stacking

The Sentry Barrier must only be stacked when empty and are not designed to be stacked on each other when filled. It is recommended to stack the empty Sentry sections no more than three high as seen in Figure 5 (or on pg 24). Designed into the top surface of each Sentry section are stacking lugs which fit into recessed formed sections on the bottom surface of each Sentry wall as seen in Figure 5. These stacking lugs interlock the Sentry sections preventing the wall from shifting during transport or storage. The stacking lugs should be used in collaboration with straps to securely hold the entire stacked pieces together. For additional support, a long T-pin can be inserted into the knuckles to secure the Sentry as seen in Figure 5.

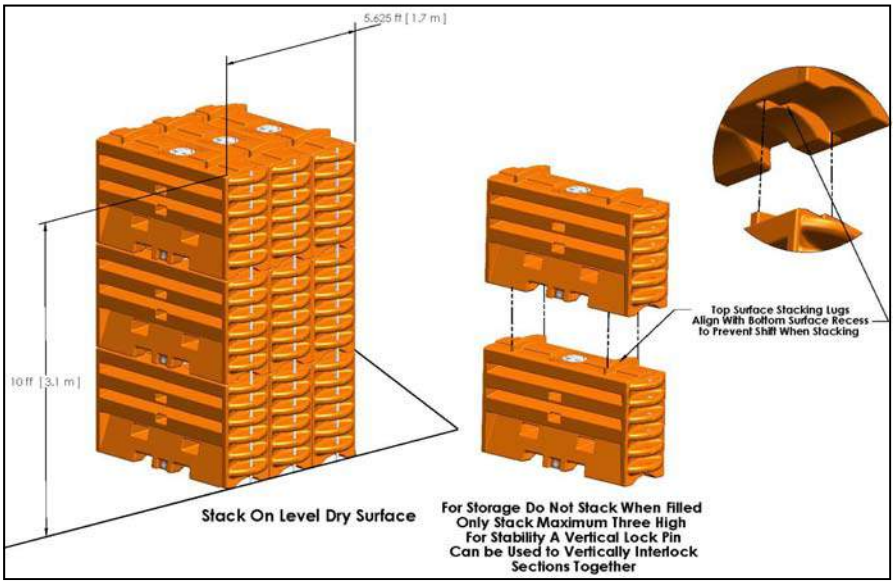

Figure 5: Sentry Stacking Diagram for Long Term Storage Requirements

Deflection Clear Zone

When installing the Sentry Water-Cable Barrier, a clear zone must be made kept on the work zone side of the barrier to allow for lateral deflection into the work zone. When impacted at the design speed of 62.5 kph [100 mph] at an impact angle of 25° with a 4500 lbs [2000 kg] impact vehicle the deflection is 9 ft [2.74m]. This is the minimum clear zone required in the work zone. This clear zone is at the test impacted design speed. Additional deflection values can be seen in Figure 6 (or on pg 25).

Impact Vehicle 4400 lbs [2000 kg]	Deflection ft [m]				
Design Speed mph [kph]	25°	20°	15°	10°	5°
68.5 [110]	10.2 [3.1]	8.2 [2.51]	6.3 [1.91]	4.2 [1.27]	2.1 [0.64]
62.1 [100] NCHRP-350 Impact	9 [2.74]	7.3 [2.22]	5.5 [1.68]	3.7 [1.13]	1.9 [0.57]
55.9 [90]	7.9 [2.4]	6.4 [1.94]	4.8 [1.47]	3.3 [0.99]	1.60 [0.49]
49.7 [80]	6.9 [2.1]	5.6 [1.7]	4.23 [1.29]	2.82 [0.86]	1.4 [0.43]
43.5 [70] NCHRP-350 Impact	5.9 [1.8]	4.8 [1.46]	3.6 [1.1]	2.4 [0.74]	1.2 [0.37]
37.3 [60]	4.9 [1.5]	4 [1.21]	3.0 [0.92]	2.0 [0.62]	1.0 [0.311]
31 [50]	3.9 [1.2]	3.2 [0.97]	2.4 [0.73]	1.6 [0.49]	.82 [0.25]
24.9 [40]	3.0 [0.9]	2.4 [0.73]	1.6 [0.5]	1.21 [0.37]	.62 [0.19]

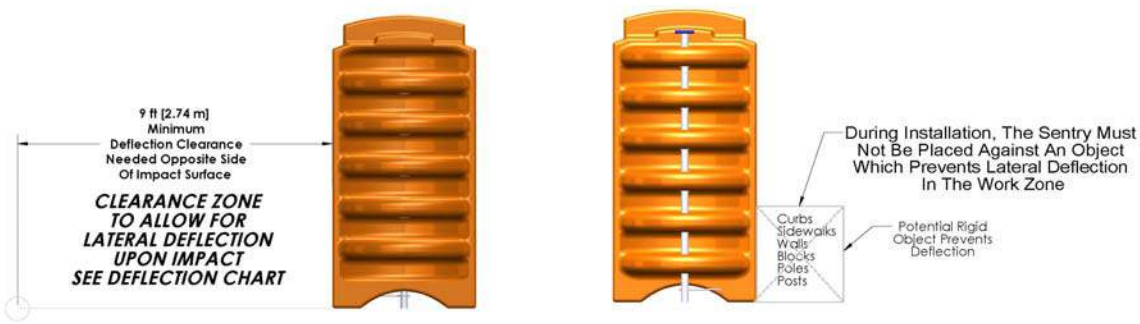

Figure 6: Clear Zone Diagram and Chart Recommendation

Maintenance and Repair

There are no scheduled maintenance requirements for the Sentry. There should be periodic checking of the water level to insure that it is filled to the proper level. The Sentry is not fully effective unless each section is filled. If the optional water level indicator is installed, a visual inspection can be made while driving by, otherwise the fill cap should be removed for the inspection.

In a major impact, a severely damaged Sentry section should be removed and replaced. There may be leaking sections that can be repaired following the steps below.

Patching leaks (holes or cracks) in the Sentry plastic should be done on completely dry surfaces free of dirt and grease. In addition, any paint or added finish beyond the factory smooth plastic surface should be removed.

Plastic welding and welding patches onto the surface is the most common method for repairing leaking sections of the Sentry wall. A plastic repair kit can be obtained from TrafFix Devices Inc. The plastic patch is made from the same material as the Sentry plastic. The welding rod is made from the same material as the Sentry plastic material as well. A small butane or propane torch is used for applying heat to the plastic rod. The rod should be melted to the patch and the wall surface in order to create a bonding patch. Temperature for bonding the plastic is

500-550°F [260-290°C]. The torch head should be held ¼-½ inch [0.635-1.27 cm] away from the weld surface. Care should be taken when applying heat to plastic to insure that the melting occurs only as desired.
NOTE: Repairing a crack or hole does not return the plastic to its original strength, although most repairs are sufficient to insure a water tight section. Monitoring of the repair should be done for a short period after filling to insure that the repair has been done properly. If leaks cannot be prevented, the section should be replaced.

In addition, if there has been an impact, the T-pins may be difficult to remove for wall realignment since some sections have been compressed. A fork lift will facilitate wall realignment if necessary, without removing the T-pins or to relieve the force on the T-pins.

Internal cable maintenance
The internal molded-in cables are made of high corrosion resistant steel which are designed to be strong enough to prevent intrusion into the work zone after impact. During normal use, they require no maintenance. Before long term storage, it is recommended that the internal cables be rinsed with clean water. If a water freezing preventative solution has been used, rinsing is essential.

Water Freezing Prevention

In freezing weather conditions, allowing the water in Sentry to freeze to a solid mass of ice should not be allowed. If the temperature at the Sentry site is expected to be at or below the freezing point of water, it is recommended that an additive be used to prevent the water in the Sentry wall from freezing.

-Common additives used to prevent water freezing currently used in work zone devices under the same category as the Sentry Water-Cable Barrier.

SALT (Sodium Chloride)
20% mixture by weight
Reduces freezing down to 0° F [-18° C].
Corrosive to inadequately protected steel components (Galvanizing adequately prevents corrosion)
Recommended - premix before filling
Prevent spilling since solution is harmful to vegetation, soils, and wildlife. Draining should be done in an acceptable area.

CALCIUM CHLORIDE
35% mixture by weight
Reduces Freezing down to 20° F [-6.6 °C].
Corrosive to thin zinc plated components
Corrosive to inadequately protected steel components (Galvanizing adequately prevents corrosion)
High tendency to stay on road surface resulting in slick road surface.
High level of heat created when mixing. It is recommended that pre-mixing is done before filling.
Prevent spilling since solution is harmful to vegetation, soils, and wildlife. Draining should be done in an acceptable area.

ETHYLENE/PROPYLENE GLYCOL
50% mixture by volume
Reduces water freezing to 0° F [-18° C].
High tendency to stay on road surface resulting in slick road surface.
Prevent spilling since solution is harmful to vegetation, soils, and wildlife. Draining should be done in an acceptable area.

LIQUID CMA (calcium magnesium acetate)
25% mixture by volume
Reduces water freezing to 0° F [-18° C].
Has a low environmental impact.

LIQUID POTASSIUM ACETATE
60% mixture by volume
Reduces water freezing to 20° F [-6.6° C]
Low corrosive characteristics and has a low environmental impact.

Additive	Environmental Impact	Cost Rating	Protection Temp	Mix Solution Ratio
Salt (Sodium Chloride)	Harmful	Low	0 °F [-18 ° C]	20% by weight
Calcium Chloride	Harmful	Medium	20 °F [-6.6 ° C]	35% by weight
Ethylene/Propylene Glycol	Dangerous	High	0 °F [-18 ° C]	50% by volume
Liquid CMA	Non-Toxic	High	0 °F [-18 ° C]	25% by volume
Liquid Potassium Acetate	Non-Toxic	High	20 °F [-6.6 ° C]	60% by volume

Figure 7- Recommended water freezing prevention chart solution comparison

Redeployment to Another Site

If redeployment to another near-by site is required, a decision should be made as to whether draining of the sections is required. If the correct equipment is available, draining may not be necessary, but extreme care must be made when moving the 2000 lbs (907 kg) sections because of their weight. The correct equipment would be a forklift and appropriate transport vehicles. If the Sentry is going to be stored for a period of time or if the correct equipment is not available, the sections should be drained by removing the drain plug with the drain plug removal tool.

Limitations and Warnings

The TrafFix Devices Sentry Water-Cable™ Barrier has been tested and passed all NCHRP-350 test criteria and received FHWA product acceptance letter HSSD-B196 as a Longitudinal Barrier and Longitudinal Channelizing Device at Test Level 3 (TL-3), Test Level 2 (TL-2) and Test Level 1 (TL-1).

This installation document is intended to provide guidance with the Sentry field installation which is most commonly used in the work zone. **This is only a guide and local road authorities and regulations should always be checked for final installation procedures and guidance.**

When the Sentry Water-Cable Barrier is correctly interlinked together with individual barrier sections and completely filled with water, the Sentry barrier tested prevented the impacting vehicle from intruding into the work zone, going under, over or through the Sentry wall at TL -3 impact conditions. TL-3 testing was done at a midpoint of a 156 ft [45.7m] with an interlinked wall configuration.

Impact Test Specifications Per Report NCHRP-350
Test Designation Number: 3-10
TL-3 100 km/h [62.5 mph]
Impact Vehicle: 820 kg [1808 lbs]
Angled Impact 20°
Twenty Five Sentry Sections Interlinked

Test Designation Number: 2-11
TL-2 70 km/h [45 mph]
Impact Vehicle: 2000 kg [4500 lbs]
Angled Impact 25°
Twenty Five Sentry Sections Interlinked

Test Designation Number: 3-11
TL-3 100 km/h [62.5 mph]
Impact Vehicle: 2000 kg [4500 lbs]
Angled Impact 25°
Twenty Five Sentry Sections Interlinked

Typical Field Installations

160 Ave. La Pata
San Clemente, California 92673
(949) 361-5663
FAX (949) 361-9205
www.traffixdevices.com

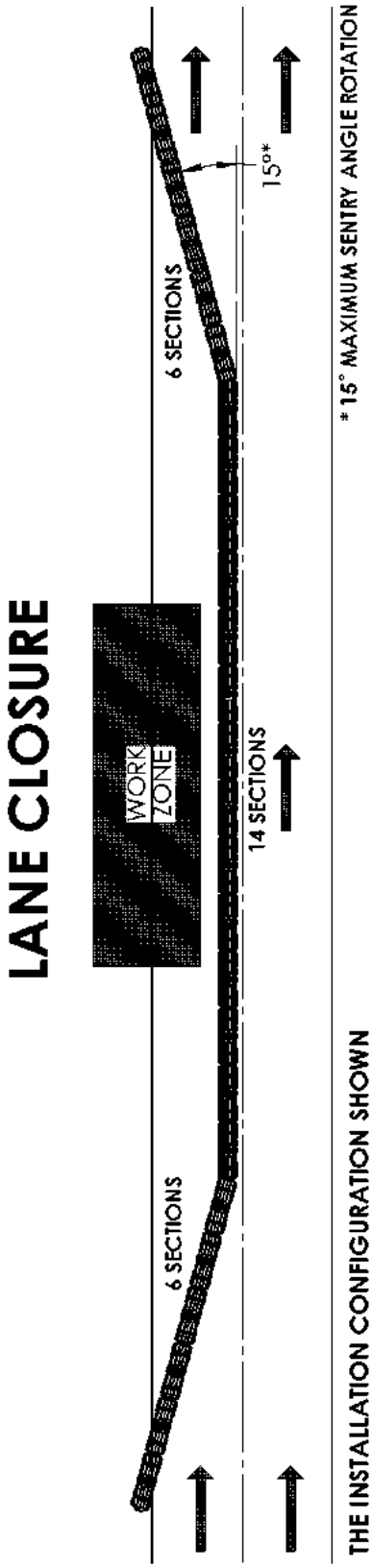
LANE CLOSURE
6 SECTIONS
WORK ZONE
14 SECTIONS
6 SECTIONS
15°*
* 15° MAXIMUM SENTRY ANGLE ROTATION
THE INSTALLATION CONFIGURATION SHOWN IS AN EXAMPLE. ALWAYS REFER TO LOCAL REGULATIONS AND ROAD AUTHORITY FOR FINAL CONFIGURATION APPROVAL.

SHOULDER CLOSURE

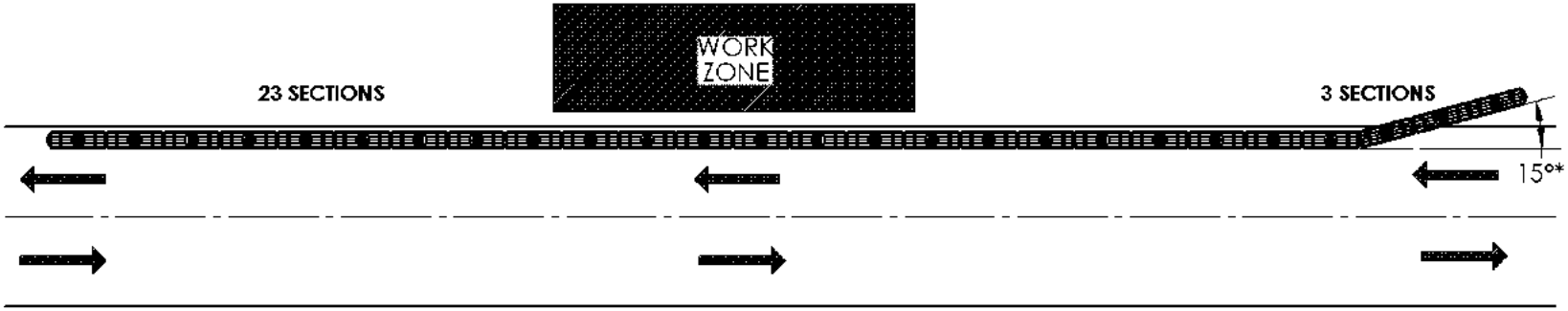

* 15° MAXIMUM SENTRY ANGLE ROTATION

THE INSTALLATION CONFIGURATION SHOWN IS AN EXAMPLE. ALWAYS REFER TO LOCAL REGULATIONS AND ROAD AUTHORITY FOR FINAL CONFIGURATION APPROVAL.

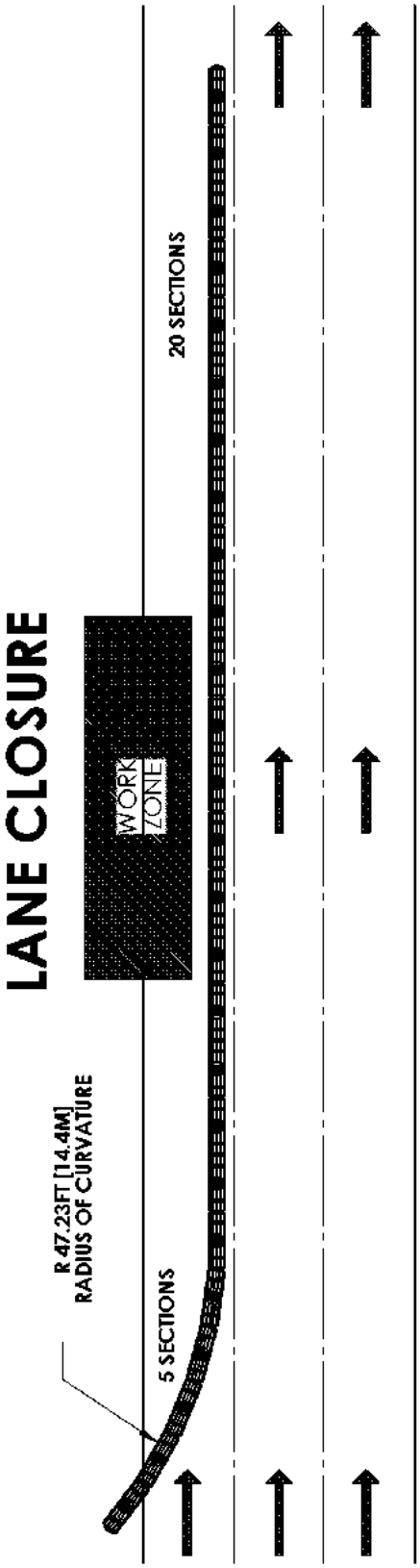

THE INSTALLATION CONFIGURATION SHOWN IS AN EXAMPLE. ALWAYS REFER TO LOCAL REGULATIONS AND ROAD AUTHORITY FOR FINAL CONFIGURATION APPROVAL.

TWO WAY DOUBLE LANE CLOSURE

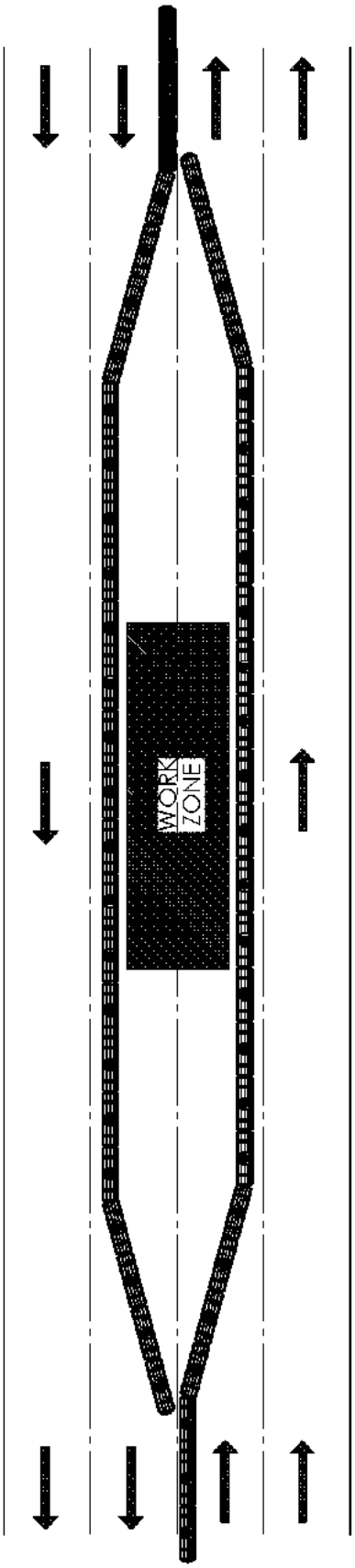

THE INSTALLATION CONFIGURATION SHOWN IS AN EXAMPLE. ALWAYS REFER TO LOCAL REGULATIONS AND ROAD AUTHORITY FOR FINAL CONFIGURATION APPROVAL.

LANE SHIFT

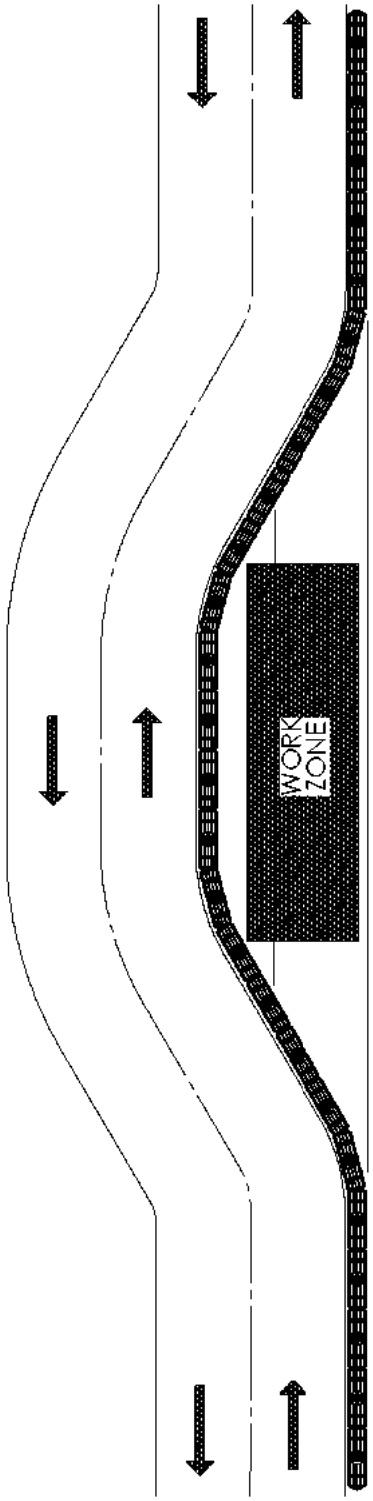

THE INSTALLATION CONFIGURATION SHOWN IS AN EXAMPLE. ALWAYS REFER TO LOCAL REGULATIONS AND ROAD AUTHORITY FOR FINAL CONFIGURATION APPROVAL.

DRIVEWAY OPENING TURNOUT

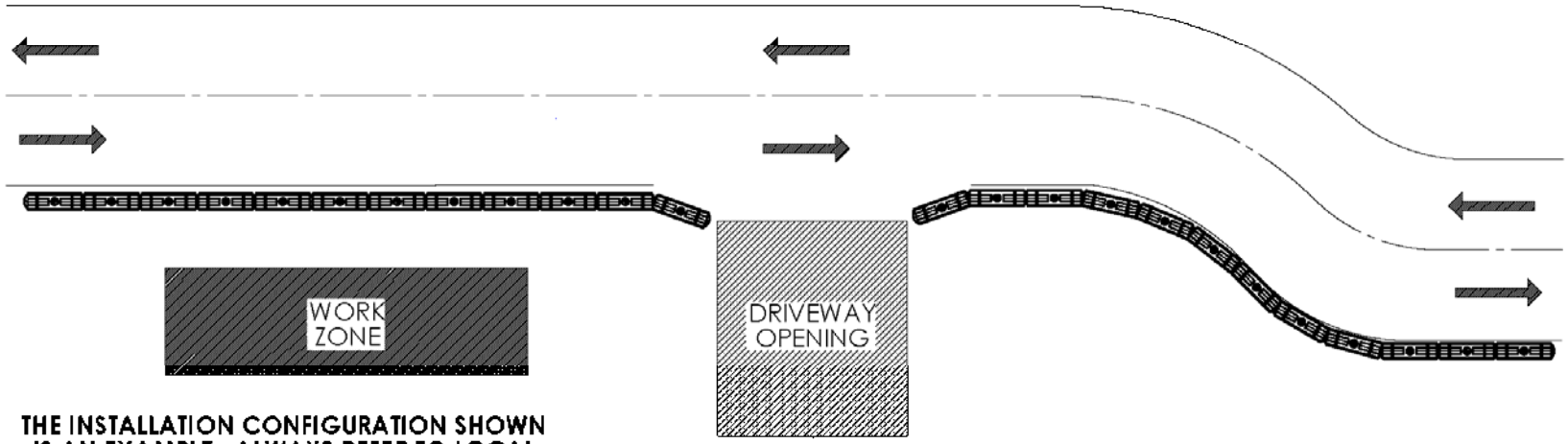

THE INSTALLATION CONFIGURATION SHOWN IS AN EXAMPLE. ALWAYS REFER TO LOCAL REGULATIONS AND ROAD AUTHORITY FOR FINAL CONFIGURATION APPROVAL.

Delineation Marking

Delineation Marking meeting AS 1906.2 or Class 1A reflective sheeting complying with AS 1906.1 will be adhesively applied to the Sentry Water-Cable Barrier. Delineation should utilize a corner cube delineator or a similar product mounted on the upper stacking lugs of the Sentry Water Cable Barrier.

Float Lid

To indicate the water level in the Sentry Water-Cable Barrier, a TrafFix Devices Float Lid can be used. The Float Lid consists of a lid and a green indicator. When the Sentry Water-Cable Barrier is filled to the appropriate level, the green level indicator is popped up as shown in the figure below. When the Sentry Water-Cable Barrier is not filled to the appropriate level, the green level indicator retracts into the barrier wall. It is important to frequently check the barrier walls to ensure that the water is at the appropriate level. If the green level indicator is not detectable from a drive by inspection (the green indicator is retracted), then water must be added to the Sentry Water-Cable Barrier until the green indicator float is fully popped up.

Sentry Water-Cable Barrier Float Lid Assembly

Sentry Water-Cable Barrier

Fully Filled

Sentry Water-Cable Barrier

Not Fully Filled

Figure 10: TrafFix Devices Float Lid.

SLED End Treatment Installation

SLED End Treatment System for Sentry Water Cable Barrier application installation procedure

STEP 1:

Install the yellow SLED End Treatment Module to the Orange or White Sentry Water Cable Barrier (WCB) Module such that the knuckles of each Module are positively interlocked and the holes are aligned. Be sure to mate up the five (5) knuckle Module end with a six (6) moModule end.

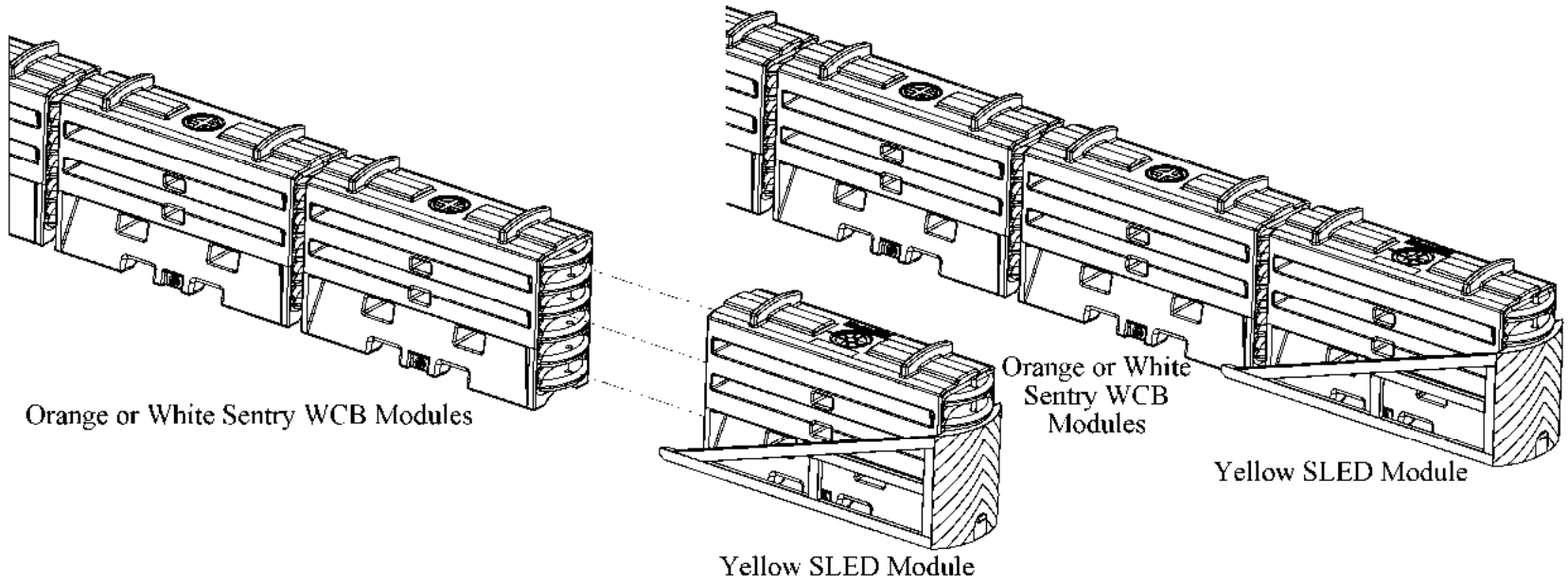

Note: For ease of installation of the SLED End Treatment System,it is recommended to fill the Sentry WCB after the SLED End Treatment System is completely installed.

STEP 2:

Insert the T-Pin from the top until the T-Pin contacts the ground. Secure the connection between Modules by inserting the Keeper Pin (R-Clip) through the small trough hole near the bottom of the T-Pin.

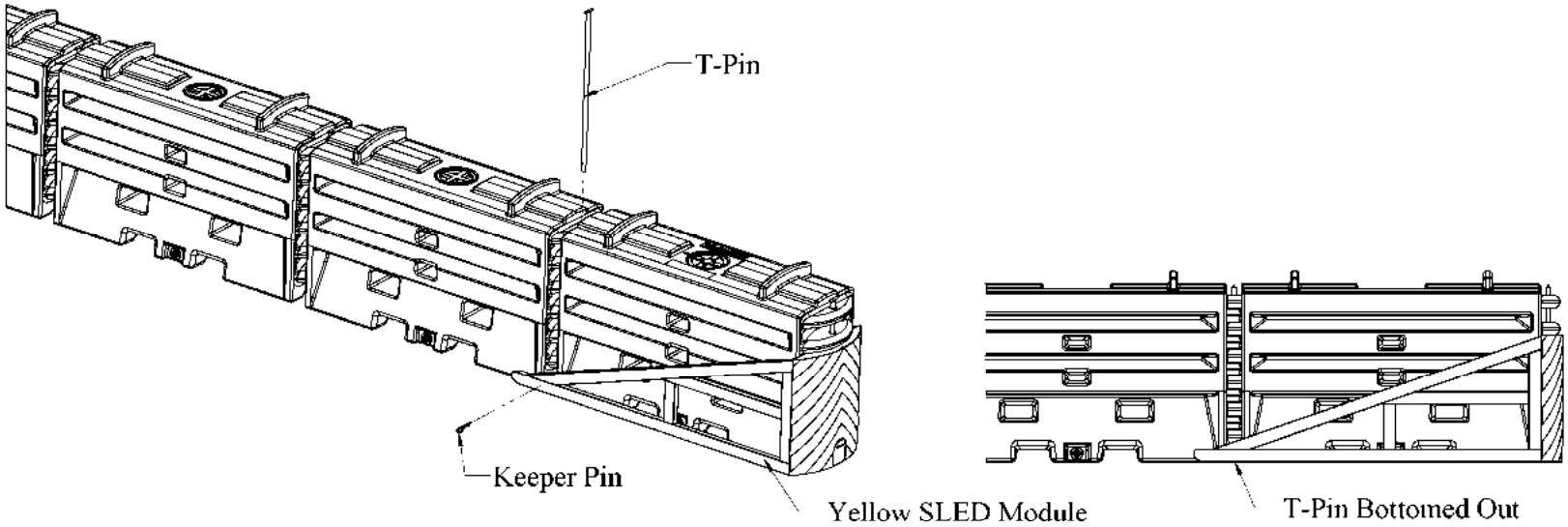

SLED End Treatment Specifications

TrafFix Devices Inc.

TrafFix SLED End Treatment System

TL-3 General Specifications

I. General

The SLED End Treatment System, components, and subassemblies shall be designed and manufactured by TrafFix Devices Inc. (TDI)
Corporate Office, San Clemente, California
Manufacturing & Distribution Center, San Clemente, California

II. System Description

The SLED End Treatment is TL-3 gating non-redirective crash cushion designed to meet crashworthy requirements of Report NCHRP-350. The SLED End Treatment System shall be used in permanent and portable installations.

The TL-3 SLED End Treatment System shall be constructed plastic and steel. Each SLED System shall consist of:

-Yellow virgin high density polyethylene (HDPE) plastic modules, containing UV stabilizers and antioxidants molded to a triple ended profile of a ribbed saw tooth shape designed to reduce penetration, vaulting, and under riding. Each full length saw tooth ribbed surface contains a flat surface to adhere a reflective sheeted section.

-Designed into each top surface shall be two extruded stacking lugs which assemble into two recessed voids on the bottom surface. This feature locks the sections together vertically and prevents shifting during transport or when stored.

-The ends of each section shall be constructed with vertically aligned knuckles which interlock with those of adjacent sections and accept a 28.58mm [1⅛ inch] diameter steel connecting T-pin. The T-pin is retained after installation by a keeper pin.

-Each module shall contain four internal molded-in corrosion resistant (galvanized) wire rope cables acting as a built in cable barrier when impacted. Each wire rope is connected to a corrosion resistant steel bushing which is molded into the knuckle sections and contains corrosion resistant surfaces and is of appropriate diameter to meet design speeds of TL -3 impacts.

-The approximate dimensions, weight, and volume of each barrier section shall be: 571 mm [22.5 in.] width x 1084 mm [42 11/16 in.] height x 1924 mm [75 3/4 in] length (pin to pin). Empty weight 72.6 kg [160 lb], weight filled 907 kg [2000 lb], water ballast 832 L [220 gal].

-Modules shall be manufactured in yellow color.

-Each section shall be manufactured with fork lift openings to allow for lifting when empty or full.

-Each section shall be manufactured with one 203.2 mm [8 in.] dia. twist lock fill lid and a 57.15 mm [2.25 in.] dia. molded-in Buttress threaded drain hole with a plug to allow quick water ballast draining.

III. Performance Criteria

The SLED End Treatment shall be tested and pass all test requirements of Report NCHRP-350 for Test Level 3 (TL-3) impact conditions for 820 kg and 2000 kg [1808 and 4500 lbs] vehicles at speeds of 100 km/h [62.5 mph].

The SLED test results shall demonstrate that a water filled gating non-redirective crash cushion shall safely decelerate the 820C and 2000P impact vehicles and shall not exceed the maximum allowable occupant risk values.
Occupant impact velocity
Maximum allowable:12 m/s for occupant
Ride down acceleration
Maximum allowable: 20 G

Detached debris shall not show potential for penetrating the vehicle occupant compartment or present a hazard to other traffic, pedestrians, or workers in a work zone.

A vehicle impacting the TrafFix SLED End Treatment shall remain upright during and after the collision.

The impacting vehicle's intrusion into adjacent traffic lanes shall be minimized.

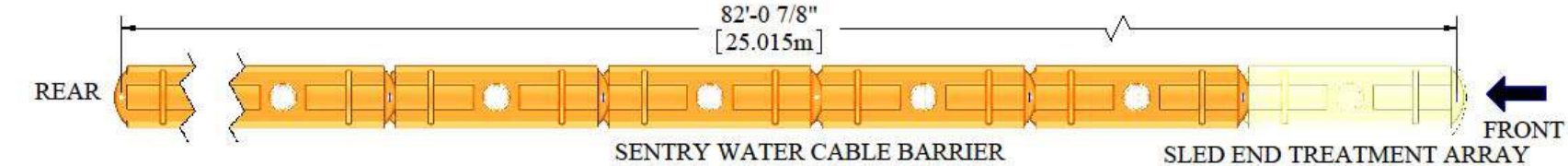

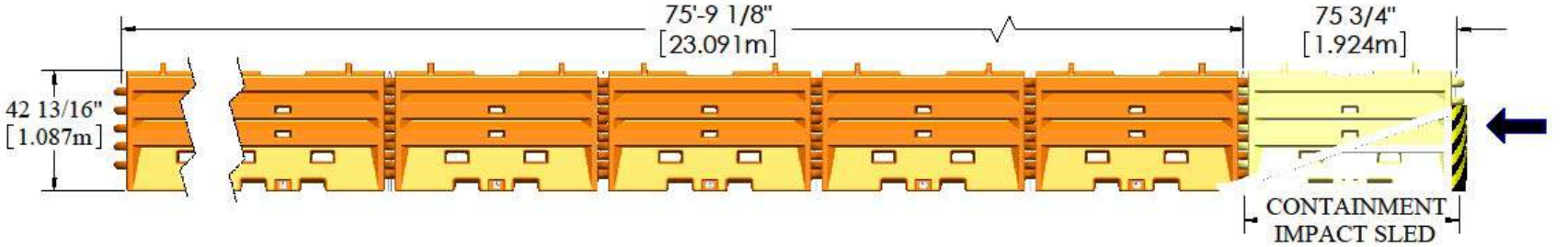

CUT AWAY OF THE SENTRY END TREATMENT ASSY

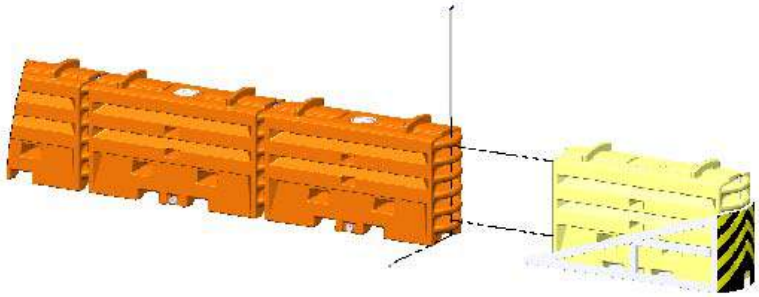

EXPLODED VIEW OF THE SLED END TREATMENT ARRAY

Appendix A: Sentry Water-Cable Barrier Specifications

160 Ave. La Pata
San Clemente, California 92673
(949) 361-5663
FAX (949) 361-9205
www.traffixdevices.com

TrafFix Devices Inc.
TrafFix Sentry™ Water-Cable Barrier
TL-3 General Specifications

I. General

The Sentry Water-Cable Barrier, components, and subassemblies shall be designed and manufactured by TrafFix Devices Inc. (TDI)
Corporate Office San Clemente, California
Manufacturing & Distribution Center, San Clemente, California

II. System Description

The Sentry Water-Cable Barrier is a longitudinal barrier designed to meet crashworthy requirements of Report NCHRP-350 TL-3, TL-2, and TL-1 as a longitudinal barrier and longitudinal channelizing device. The Sentry shall be portable and provide positive protection when used in highway construction work zones.

The TrafFix Sentry Water-Cable Barrier TL-3 shall be constructed from a series of individually linked barrier sections. Each individual barrier section shall consist of:

-Virgin high density polyethylene (HDPE) plastic shell, containing UV stabilizers and antioxidants molded to a triple faced profile of a ribbed saw tooth shape designed to reduce penetration, vaulting, and under riding. Each full length saw tooth ribbed surface contains a flat surface to adhere a reflective sheeted section.

-Designed into each top surface shall be two stacking lugs which assemble into two recessed voids on the bottom surface. This feature locks the sections together vertically and prevents shifting during transport or when stored.

-The ends of each section shall be constructed with vertically aligned knuckles which interlock with those of adjacent sections and accept a 1⅛ inch [28.58mm] diameter steel connecting T-pin. The T-pin is retained after installation by a keeper pin.

-Each barrier section shall contain four internal molded-in corrosion resistant wire rope cables acting as a built in cable barrier when impacted. Each wire rope is connected to a corrosion resistant steel bushing which is molded into the knuckle sections and contains corrosion resistant surfaces and is of appropriate diameter to meet design speeds of TL-3 impacts.

-The approximate dimensions, weight, and volume of each barrier section shall be: 22.5 in. [571 mm] width x 42 11/16 in. [1084 mm] height x 75 3/4 in [1924 mm] length (pin to pin). Empty weight 160 lbs [72.6 kg], weight filled 2000 lbs [907 kg], water ballast 220 gal [832 L].

-Barrier sections shall be manufactured in Orange and White colors.

-Each section shall be manufactured with fork lift openings to allow for lifting when empty or full.

-Each section shall be manufactured with one 8 in. [203.2 mm] dia. twist lock fill lid and a 2.25 in. [57.15 mm] dia. molded-in Buttress threaded drain hole with a plug to allow quick water ballast draining.

III. Performance Criteria

The Sentry Water-Cable Barrier shall be tested and pass all test requirements of Report NCHRP-350 for Test Level 3 (TL-3) impact conditions for 820 kg and 2000 kg [1808 and 4500 lbs] vehicles at speeds of 100 km/h [62.5 mph].

The Sentry test results shall demonstrate a non-gating with controlled penetration barrier device when impacted at high impact angles of intrusion at the critical impact point. All occupant risk values shall not exceed the maximum allowable of 12 m/s for occupant impact velocity and 20 g for ridedown acceleration.

Maximum dynamic deflection at point of impact shall not exceed 12 ft [3.7 m] when impacted at the design speed of TL-3 100 km/h (62.5 mph) utilizing the 2000 kg (4500 lbs) vehicle.

The TrafFix Sentry Water-Cable Barrier shall be capable of preventing vehicle penetration, vaulting, and under riding, and shall bring the impacting vehicle to a controlled stop in the vicinity of the impact area, or for shallow angle impacts shall redirect the vehicle, while undergoing controlled lateral deflection.

Detached debris shall not show potential for penetrating the vehicle occupant compartment or present a hazard to other traffic, pedestrians, or workers in a work zone.

A vehicle impacting the TrafFix Sentry Water-Cable Barrier shall remain upright during and after the collision though moderate roll, pitch, and yaw may occur.

The impacting vehicles intrusion into adjacent traffic lanes shall be minimized.

Appendix B: Drawings

160 Ave. La Pata
San Clemente, California 92673
(949) 361-5663
FAX (949) 361-9205
www.traffixdevices.com

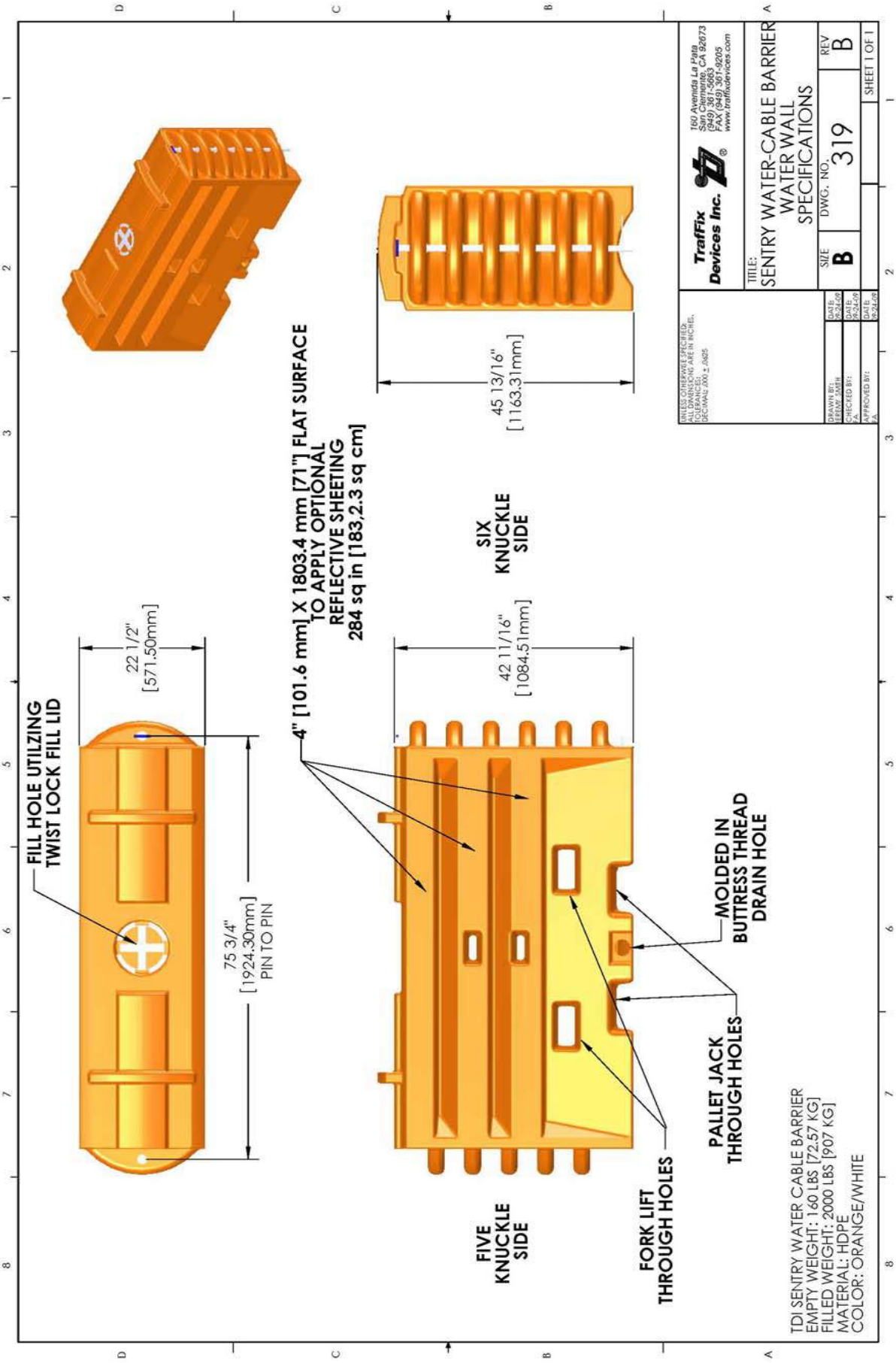
FILL HOLE UTILZING
TWIST LOCK FILL LID
22 1/2"
[571.50mm]
75 3/4"
[1924.30mm]
PIN TO PIN
4" [101.6 mm] X 1803.4 mm [71"] FLAT SURFACE
TO APPLY OPTIONAL
REFLECTIVE SHEETING
284 sq in [183.2.3 sq cm]
42 11/16"
[1084.51mm]
FIVE
KNUCKLE
SIDE
SIX
KNUCKLE
SIDE
45 13/16"
[1163.31mm]
MOLDED IN
BUTTRESS THREAD
DRAIN HOLE
PALLET JACK
THROUGH HOLES
FORK LIFT
THROUGH HOLES
TDI SENTRY WATER CABLE BARRIER
EMPTY WEIGHT: 160 LBS [72.57 KG]
FILLED WEIGHT: 2000 LBS [907 KG]
MATERIAL: HDPE
COLOR: ORANGE/WHITE
TrafFix Devices Inc.
160 Avenida La Pata
San Clemente, CA 92673
(949) 361-5663
FAX (949) 361-9205
www.traffixdevices.com
TITLE:
SENTRY WATER-CABLE BARRIER
WATER WALL
SPECIFICATIONS
SIZE
B
DWG. NO.
319
REV
B
SHEET 1 OF 1
UNLESS OTHERWISE SPECIFIED:
ALL DIMENSIONS ARE IN INCHES.
TOLERANCES:
DECIMALS: .XX ± .025
DRAWN BY:
DATE
10-24-09
CHECKED BY:
DATE
10-24-09
APPROVED BY:
DATE
10-24-09

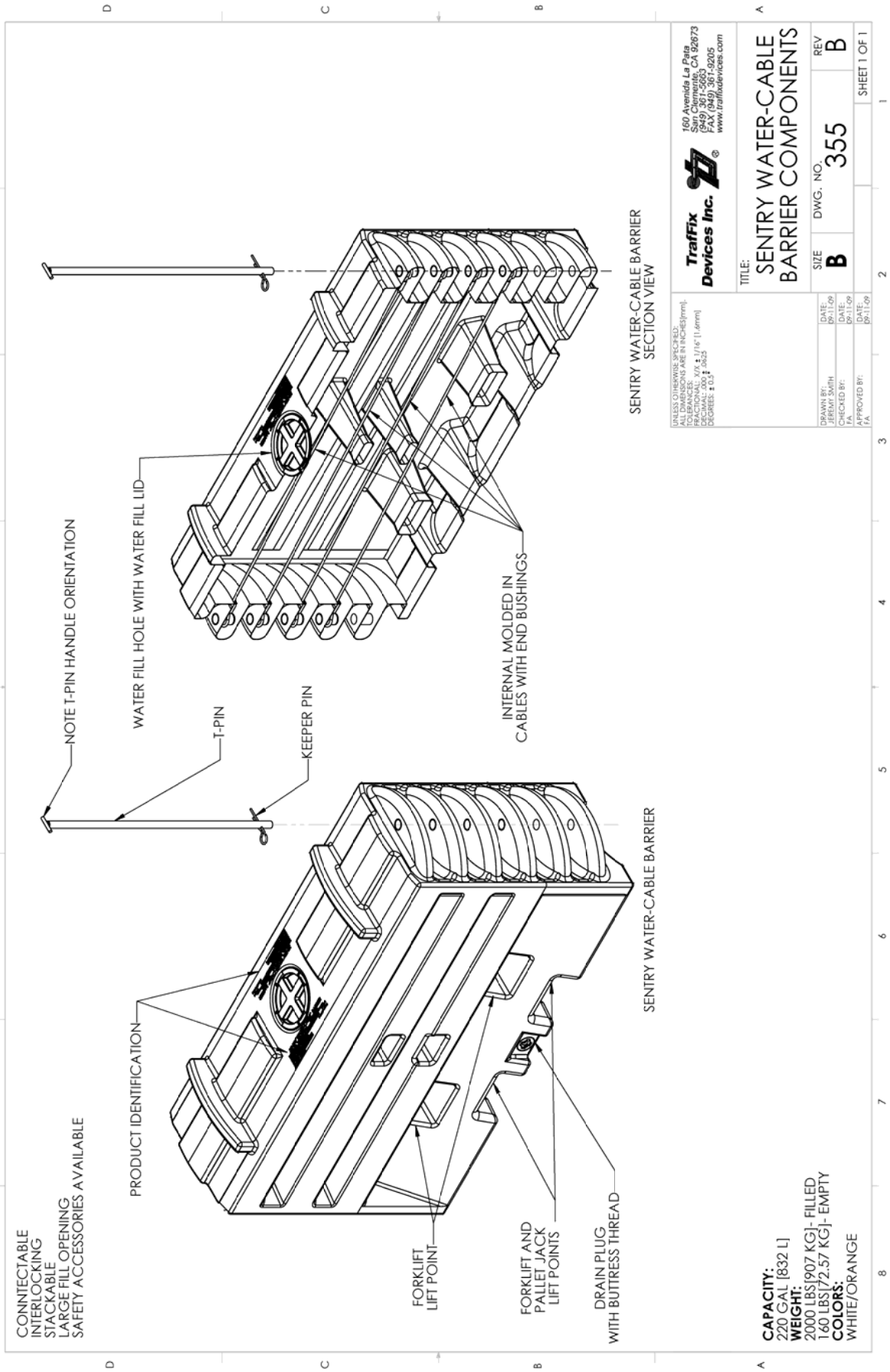
NOTE T-PIN HANDLE ORIENTATION
WATER FILL HOLE WITH WATER FILL LID
T-PIN
KEEPER PIN
INTERNAL MOLDED IN
CABLES WITH END BUSHINGS
SENTRY WATER-CABLE BARRIER
SECTION VIEW
PRODUCT IDENTIFICATION
SENTRY WATER-CABLE BARRIER
FORKLIFT
LIFT POINT
FORKLIFT AND
PALLET JACK
LIFT POINTS
DRAIN PLUG
WITH BUTTRESS THREAD
CONNTECTABLE
INTERLOCKING
STACKABLE
LARGE FILL OPENING
SAFETY ACCESSORIES AVAILABLE
CAPACITY:
220 GAL [832 L]
WEIGHT:
2000 LBS[907 KG]- FILLED
160 LBS[72.57 KG]- EMPTY
COLORS:
WHITE/ORANGE
UNLESS OTHERWISE SPECIFIED:
ALL DIMENSIONS ARE IN INCHES[mm].
TOLERANCES:
FRACTIONAL: .X/X ± 1/16" [1.6mm]
DECIMAL: .XX ± .0625
DEGREES: ± 0.5°
DRAWN BY: JEREMY SMITH
DATE: 09-11-09
CHECKED BY: FA
DATE: 09-11-09
APPROVED BY: FA
DATE: 09-11-09
TrafFix Devices Inc.
160 Avenida La Pata
San Clemente, CA 92673
(949) 361-5665
FAX (949) 361-9205
www.traffixdevices.com
TITLE:
SENTRY WATER-CABLE
BARRIER COMPONENTS
SIZE
B
DWG. NO.
355
REV
B
SHEET 1 OF 1

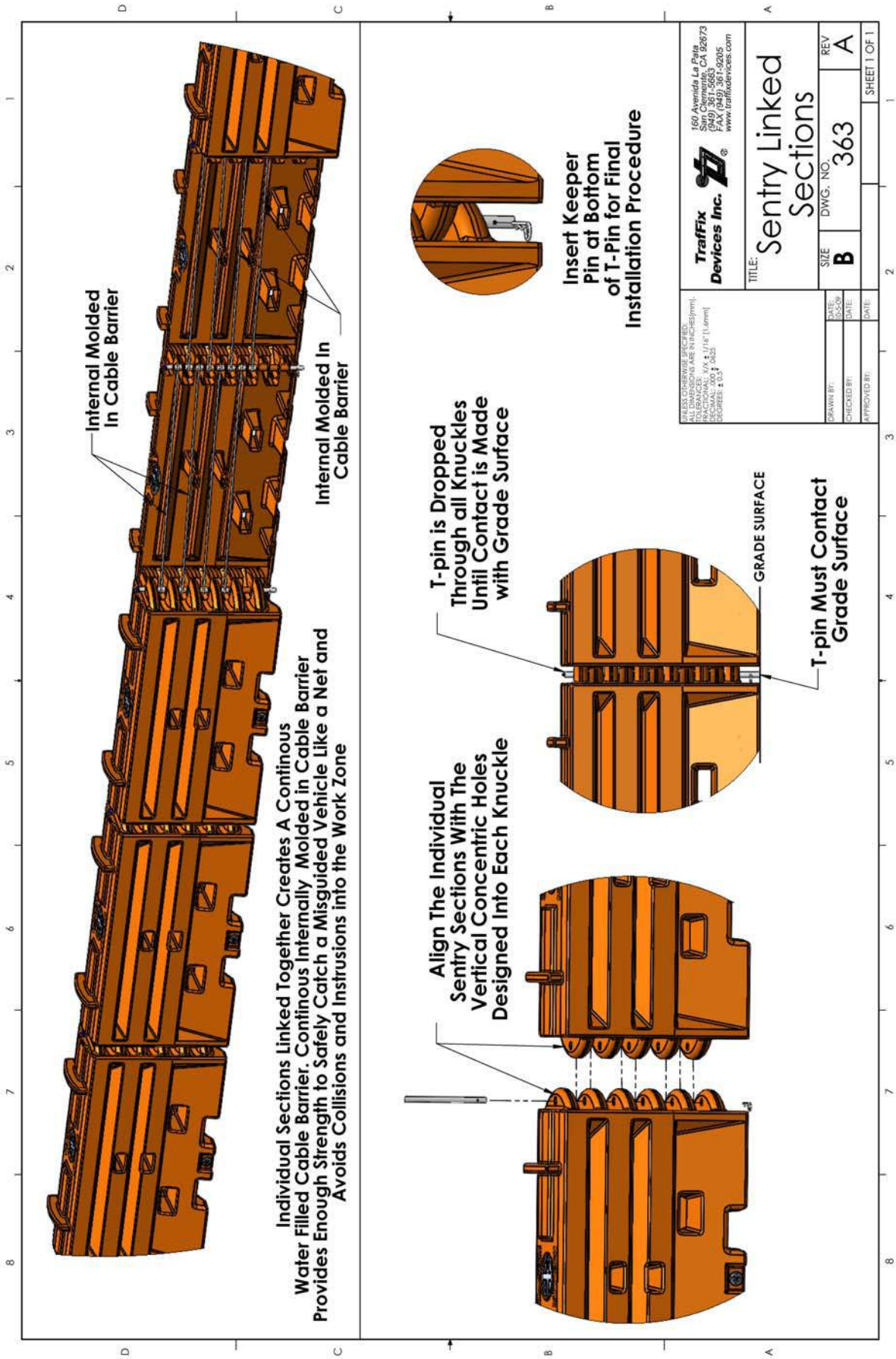
Internal Molded In Cable Barrier
Internal Molded In Cable Barrier
Individual Sections Linked Together Creates A Continous Water Filled Cable Barrier. Continous Internally Molded in Cable Barrier Provides Enough Strength to Safely Catch a Misguided Vehicle Like a Net and Avoids Collisions and Instrusions into the Work Zone
Insert Keeper Pin at Bottom of T-Pin for Final Installation Procedure
T-pin is Dropped Through all Knuckles Until Contact is Made with Grade Surface
GRADE SURFACE
T-pin Must Contact Grade Surface
Align The Individual Sentry Sections With The Vertical Concentric Holes Designed Into Each Knuckle
TrafFix Devices Inc.
160 Avenida La Pata
San Clemente, CA 92673
(949) 361-5663
FAX (949) 361-9205
www.traffixdevices.com
TITLE:
Sentry Linked Sections
SIZE
B
DWG. NO.
363
REV
A
SHEET 1 OF 1
DRAWN BY:
CHECKED BY:
APPROVED BY:
DATE:
UNLESS OTHERWISE SPECIFIED:
ALL DIMENSIONS ARE IN INCHES[mm].
TOLERANCES:
FRACTIONAL: X/X ± 1/16" [1.6mm]
DECIMAL: .000 ± .0625
DEGREES: ± 0.5°

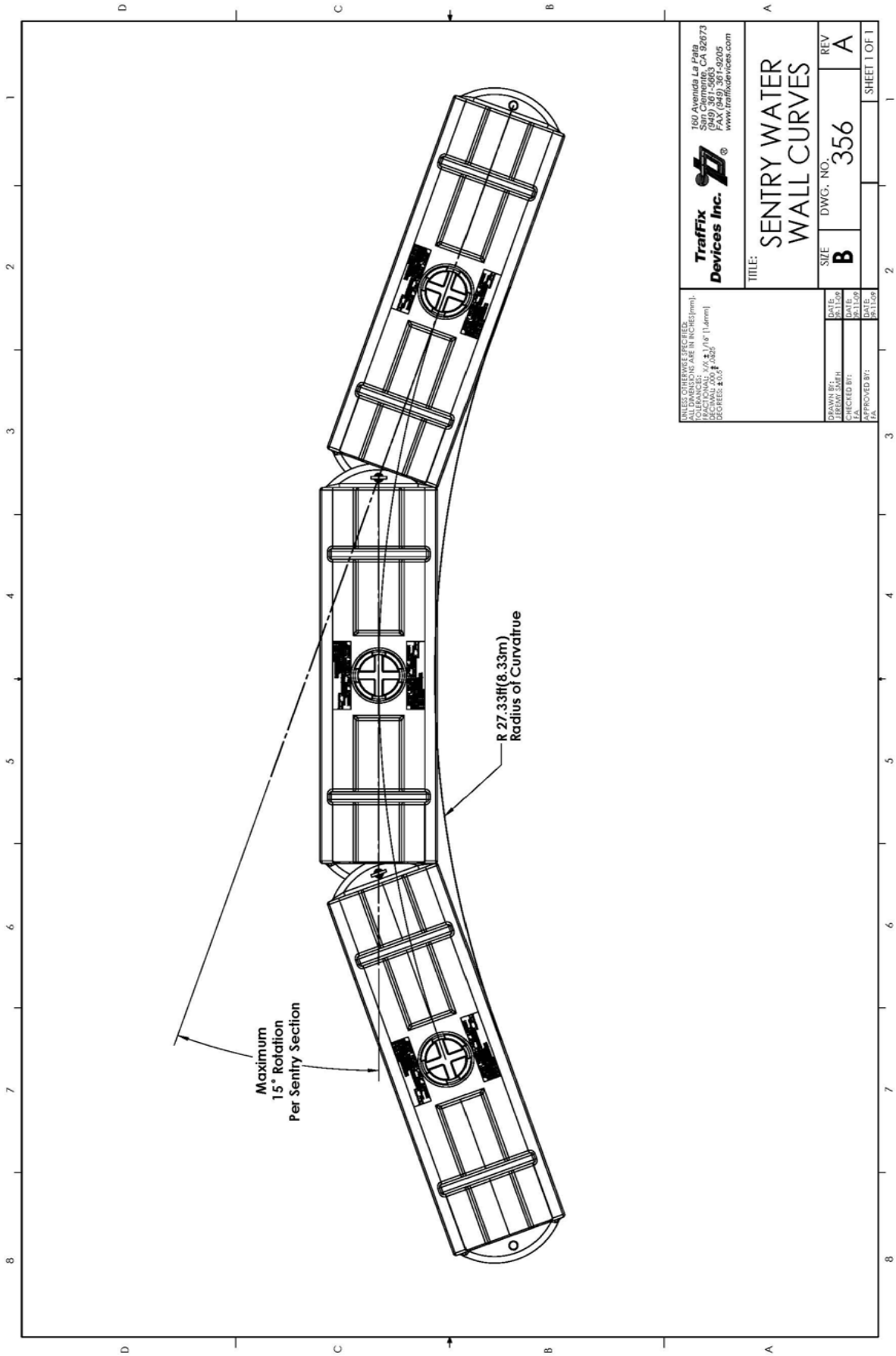
R 27.33ft(8.33m)
Radius of Curvatrue
Maximum
15° Rotation
Per Sentry Section
TrafFix Devices Inc.
160 Avenida La Pata
San Clemente, CA 92673
(949) 361-5663
FAX (949) 361-9205
www.traffixdevices.com
TITLE:
SENTRY WATER
WALL CURVES
SIZE
B
DWG. NO.
356
REV
A
SHEET 1 OF 1
UNLESS OTHERWISE SPECIFIED:
ALL DIMENSIONS ARE IN INCHES [mm].
TOLERANCES:
FRACTIONAL: ±1/16 ± 1/16" [1.6mm]
DECIMAL: .00 ± .025
DEGREES: ±0.5°
DRAWN BY: JEFFAY SMITH
DATE: 6-11-06
CHECKED BY: FA
DATE: 6-11-06
APPROVED BY: FA
DATE: 9-11-06

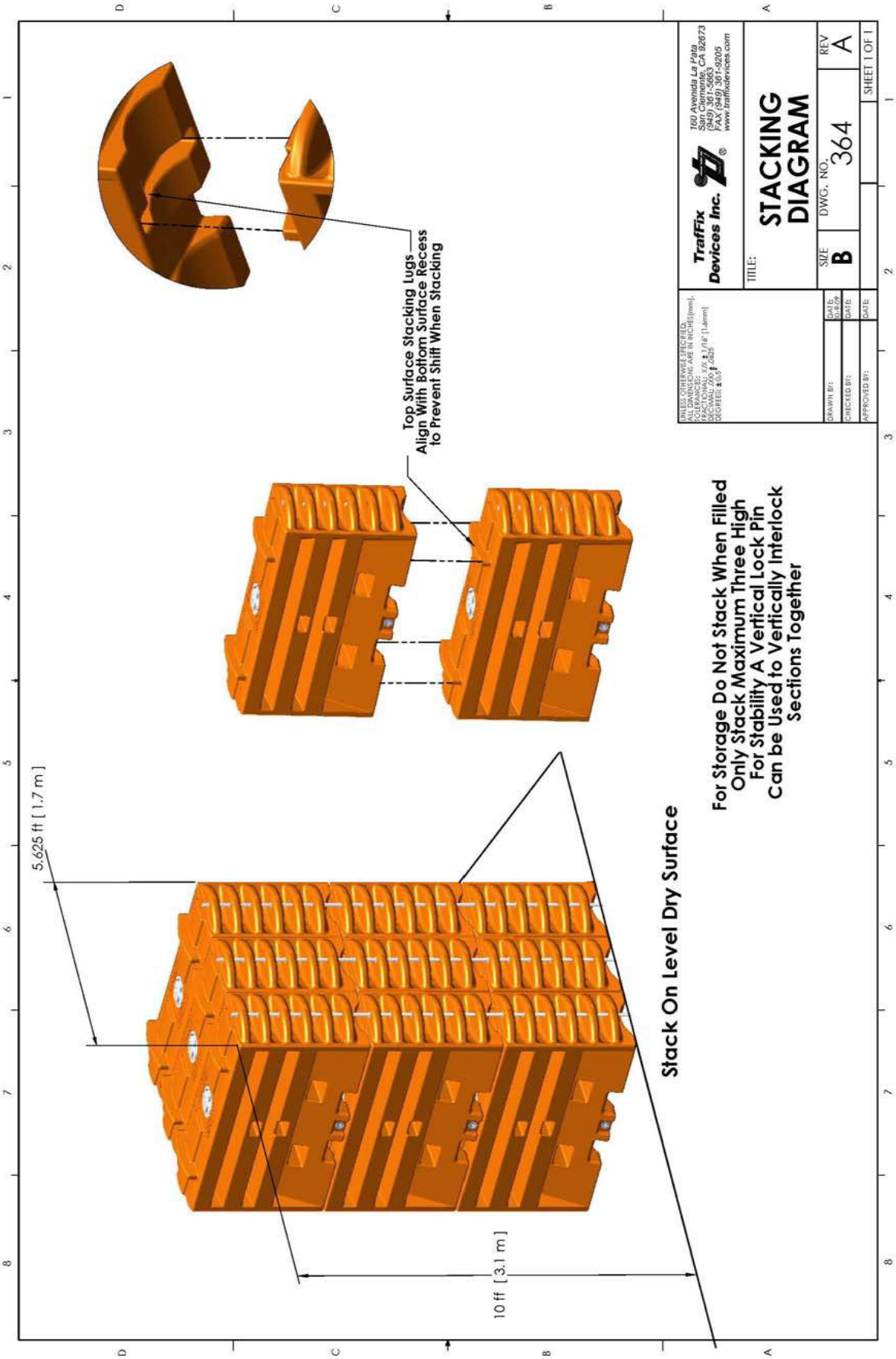
Top Surface Stacking Lugs
Align With Bottom Surface Recess
to Prevent Shift When Stacking
5.625 ft [1.7 m]
10 ft [3.1 m]
Stack On Level Dry Surface
For Storage Do Not Stack When Filled
Only Stack Maximum Three High
For Stability A Vertical Lock Pin
Can be Used to Vertically Interlock
Sections Together
TrafFix Devices Inc.
160 Avenida La Pata
San Clemente, CA 92673
(949) 361-5663
FAX (949) 361-9205
www.traffixdevices.com
TITLE:
STACKING DIAGRAM
SIZE B
DWG. NO. 364
REV A
SHEET 1 OF 1
UNLESS OTHERWISE SPECIFIED:
ALL DIMENSIONS ARE IN INCHES [mm].
TOLERANCES:
FRACTIONAL: ± 1/16" [1.4mm]
DECIMAL: .00 ± 0.025
DEGREES: ± 0.5°
DRAWN BY:
DATE: 10-8-09
CHECKED BY:
DATE:
APPROVED BY:
DATE:

Impact Vehicle 4400 lbs [2000 kg]	Deflection ft [m]				
Design Speed mph [kph]	25°	20°	15°	10°	5°
68.5 [110]	10.2 [3.1]	8.2 [2.51]	6.3 [1.91]	4.2 [1.27]	2.1 [0.64]
62.1 [100] NCHRP-350 Impact	9 [2.74]	7.3 [2.22]	5.5 [1.68]	3.7 [1.13]	1.9 [0.57]
55.9 [90]	7.9 [2.4]	6.4 [1.94]	4.8 [1.47]	3.3 [0.99]	1.60 [0.49]
49.7 [80]	6.9 [2.1]	5.6 [1.7]	4.23 [1.29]	2.82 [0.86]	1.4 [0.43]
43.5 [70] NCHRP-350 Impact	5.9 [1.8]	4.8 [1.46]	3.6 [1.1]	2.4 [0.74]	1.2 [0.37]
37.3 [60]	4.9 [1.5]	4 [1.21]	3.0 [0.92]	2.0 [0.62]	1.0 [0.311]
31 [50]	3.9 [1.2]	3.2 [0.97]	2.4 [0.73]	1.6 [0.49]	.82 [0.25]
24.9 [40]	3.0 [0.9]	2.4 [0.73]	1.6 [0.5]	1.21 [0.37]	.62 [0.19]

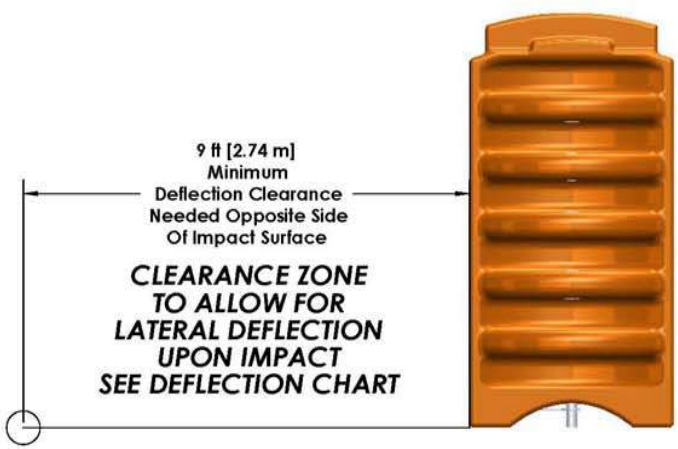

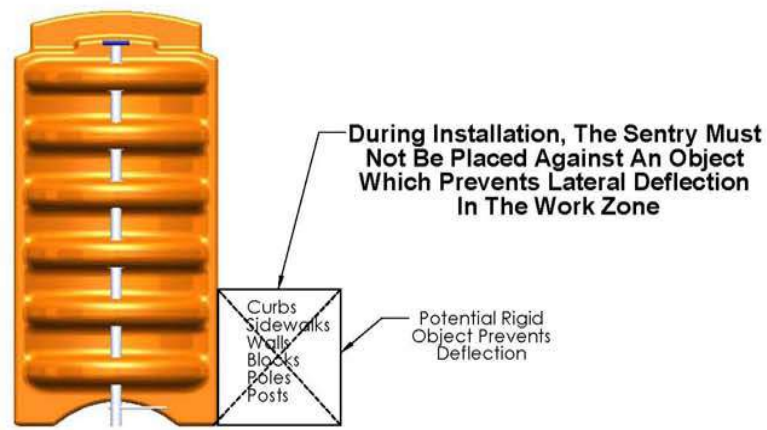

UNLESS OTHERWISE SPECIFIED:
ALL DIMENSIONS ARE IN INCHES [mm].
TOLERANCES:
FRACTIONAL: X/X ± 1/16" [1.6mm]
DECIMAL: .000 ± .0025
DEGREES: ± 0.5°

TrafFix Devices Inc.
160 Avenida La Pata
San Clemente, CA 92673
(949) 361-5663
FAX (949) 361-9205
www.traffixdevices.com

TITLE: DEFLECTION

DRAWN BY: Jeremy Smith	DATE: XX-XX-XX	SIZE	DWG. NO.	REV
CHECKED BY: x	DATE: XX-XX-XX	B	367	A
APPROVED BY: x	DATE: XX-XX-XX			SHEET 1 OF 1

Optional Water Level Indicator Fill Cap

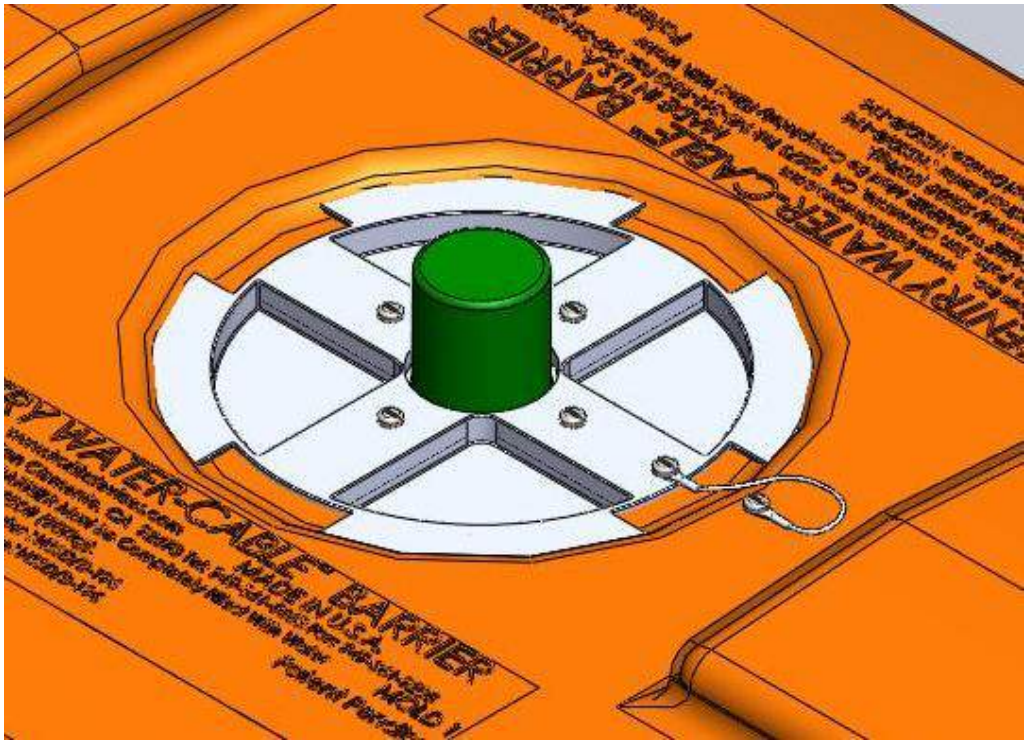

Water Level Indicator In Full "UP" Position—Wall Is Filled To Correct Capacity

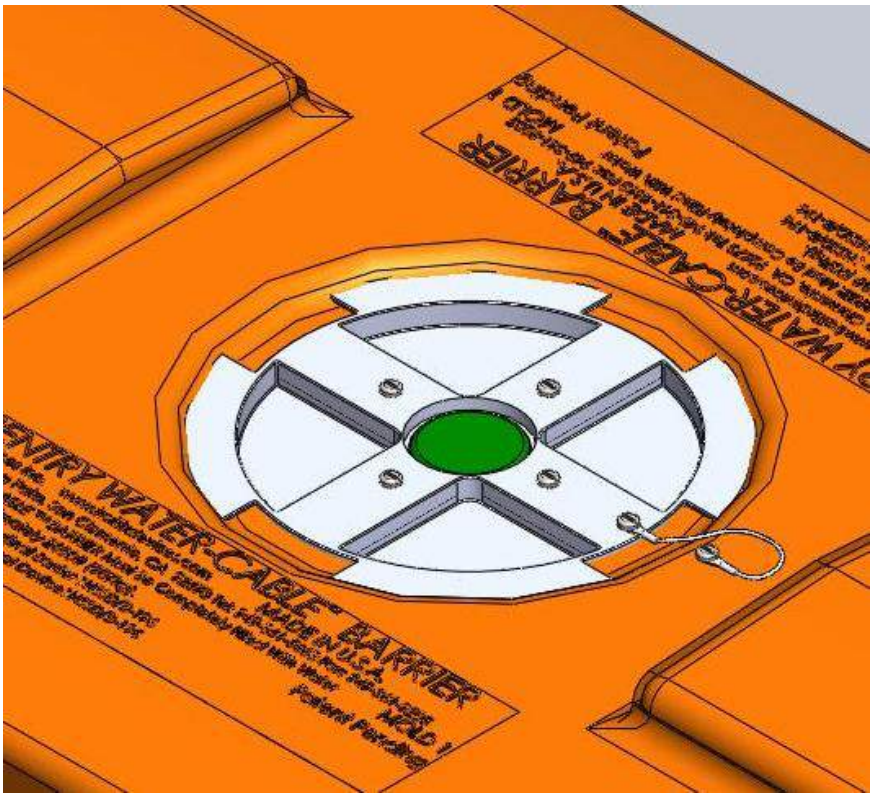

Water Level Indicator In Full "DOWN" Position—Wall Is Not Filled To Correct Capacity. It Is Necessary To Add Water.

U.S. Department of Transportation

Federal Highway Administration

Appendix C:

FHWA

Product Acceptance Letter

B-196

Use this link to locate the letters on the FHWA Website:

http://safety.fhwa.dot.gov/roadway_dept/policy_guide/road_hardware/listing.cfm?code=cushions

MOVING THE AMERICAN ECONOMY

Appendix D: Regional Sales Managers, Key Contacts & Customer Service

160 Ave. La Pata
San Clemente, California 92673
(949) 361-5663
FAX (949) 361-9205
www.traffixdevices.com

Regional Sales Managers, Key Contacts & Customer Service

➢ Regional Sales Managers

Northeast Territory Office
VA, WV, DL, MD, NJ, NY, PA, CT, MA, RI, NH, VT, ME, D.C.
John D. Risley
Philadelphia, PA
(610) 337-9556 office
(949) 573-9239 fax
jrisley@traffixdevices.com

Southeast Territory Office
TN, NC, SC, GA, MS, AL, FL
David L. Evans
Atlanta, GA
(770)794-7338 office
(949) 573-9289 fax
devans@traffixdevices.com

Northwest Territory Office
MT, UT, ID, WA, OR, NV, CO, WY
Cary LeMonds
Salt Lake City, UT
(801) 446-4450 office
(949) 573-9290 fax
clemonds@traffixdevices.com

Midwest Territory Office
OH, MI, IN, KY, IL, WI, MN, ND, SD, IA, MO
Dave H. Lindquist
Chicago, IL
(630) 406-0760 office
(949) 573-9240 fax
dlindquist@traffixdevices.com

Western Territory Office
CA, HI, AK, AZ
Eric Jones
San Clemente, CA
(949) 350-7048 office
(949) 573-9267 fax
ejones@traffixdevices.com

Southwest Territory Office
TX, OK, KS, NE, NM, AR, LA
John Gense
Dallas, TX
(214)704-1476 office
(949) 573-9291 fax
jgense@traffixdevices. com

International Sales
Brent Kulp
San Clemente, CA
(949) 361-5663 office
(949) 573-9264 fax
bkulp@traffixdevices.com

To Place Orders

Email : orders@traffixdevices.com
Fax: (949) 573-9250
Office: (949) 361-5663

➢ Key Contacts

Brent Kulp	VP Int. Sales & Marketing	bkulp@traffixdevices.com	Ph: (949) 573-9214	Fax: (949) 573-9264
Frank Cain	VP Operations	fcain@traffixdevices.com	Ph: (949) 573-9204	Fax: (949) 573-9254
Scott Ryan	VP North American Sales	sryan@traffixdevices.com	Ph: (949) 573-9216	Fax: (949) 573-9266
Jan Miller	Business Development	jmiller@traffixdevices.com	Ph: (607) 732-5698	Fax: (949) 573-9241

➢ Customer Service Department

Yvette Cervantes	Customer Service Manager	ycervantes@trafflxdevices.com	Ph:(949) 573-9220	Fax: (949) 573-9270
Jessica Pearcy	Customer Service Rep.	jpearcy@traffixdevices.com	Ph: (949) 573-9221	Fax: (949) 573-9271
Alyson Crowe	Customer Service Rep.	acrowe@traffixdevices.com	Ph: (949) 573-9222	Fax: (949) 573-9272
Jim Abercrombie	Inside Sales Specialist	jabercrombie@traffixdevices.com	Ph: (949) 573-9217	Fax: (949) 361-9205

TrafFix Devices, Inc. Headquarters
160 Ave. La Pata, San Clemente, CA 92679 - (949) 361-5663 - Fax (949) 361-9205
www.traffixdevices.com

TrafFix Devices Inc.

160 Ave. La Pata San Clemente, California 92673
(949) 361-5663 FAX (949) 361-9205
www.traffixdevices.com

Distributed By: